RUNTAL ANTEO

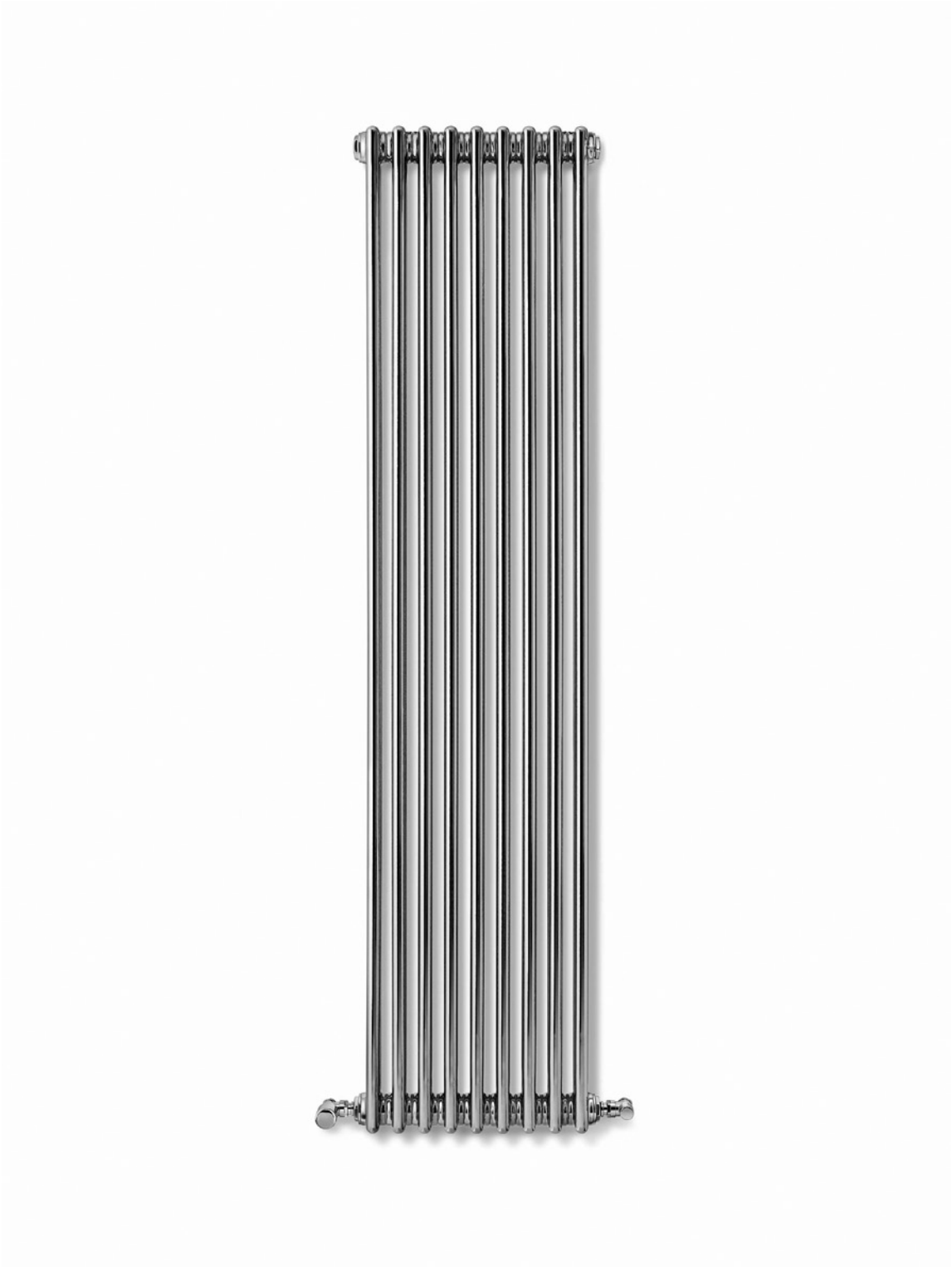

runtal

RUNTAL ANTEO TECHNICAL SPECIFICATIONS

CENTRAL HEATING VERSION

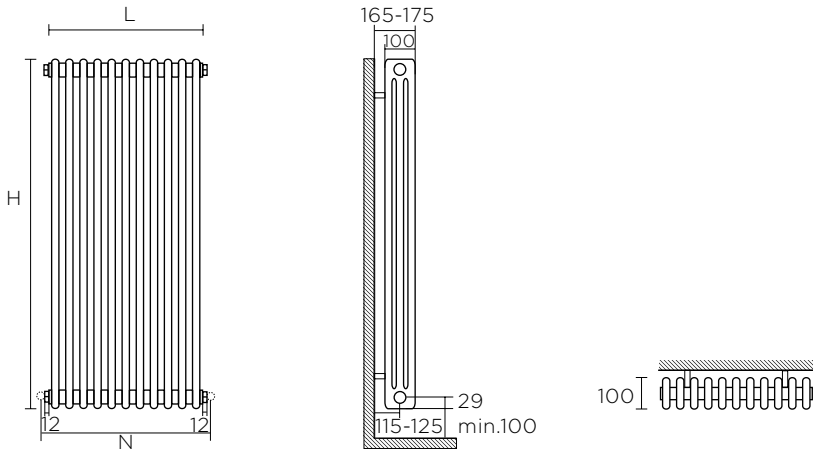

FRONT VIEW **SIDE VIEW** **TOP VIEW**

H Height
L Width
Electric immersion heater
Centre of valve for pipes into wall or to the floor
N Connection centres

RUNTAL ANTEO

CENTRAL HEATING VERSION

Height 600 mm	**Width** mm	**N** mm	**V** dm^3	**M** kg	**n**	**P ΔT 50K** Watt	**Surface (Code)**
AC-3060-11	541.5	L+24+x	9.9	15	1.26	504	chrome (0790)
AC-3060-17	820.5	L+24+x	15.3	24	1.26	780	chrome (0790)
AC-3060-22	1053.0	L+24+x	19.8	31	1.26	1009	chrome (0790)

Height 1800 mm	**Width** mm	**N** mm	**V** dm^3	**M** kg	**n**	**P ΔT 50K** Watt	**Surface (Code)**
AC-3180-4	216	L+24+x	9.6	16	1.33	500	chrome (0790)
AC-3180-7	355.5	L+24+x	16.8	29	1.33	875	chrome (0790)
AC-3180-9	448.5	L+24+x	21.6	37	1.33	1125	chrome (0790)

N: connection centres, x: valve size V: volume, M: empty weight, n: exponent, PΔT 50K: EN442 output, valid from 1.8.2011

TECHNICAL DATA

Materials	Chrome plated, round tubes Ø 25 mm made of steel
Operating pressure	Max. 10 bar
Test pressure	15 bar
Operating temperature	Max. 110° C
Standard kit	Chrome finish wall brackets in same finish as radiator and air vent included in packaging
Valves	As per ACCESSORIES price list
Connections	With the standard connection (code 240) 2×½" internal thread, the following connection is possible. ½" for flow (▶) / return (▷), on bottom opposite ends, with ½" air vent (E) pre-fitted

NB: The connection must be made in accordance with the required specifications

RUNTAL ANTEO MOUNTING INSTRUCTIONS

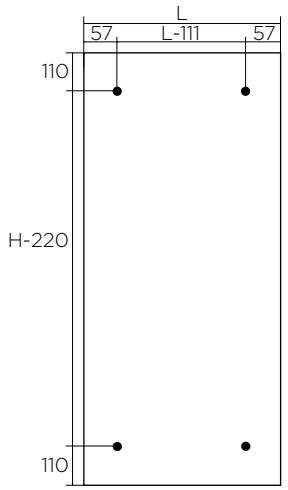

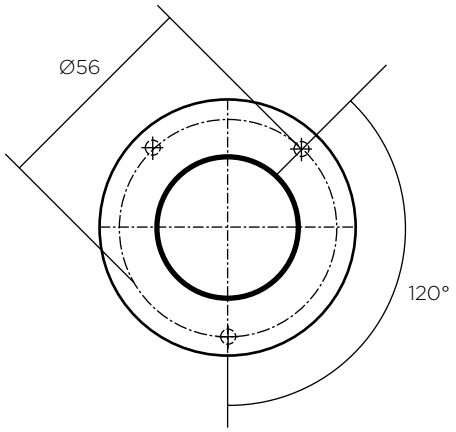

DETAIL

H Height
L Width
● Fixing point

For correct radiator installation, please note the corresponding installation instructions

RUNTAL ANTEO list 220 INT-EN 08/11.
As part of our endeavour to continually improve our products, Runtal reserves the right to make modifications without prior notice.
Technical details and prices subject to change. Our General Terms of Sale and Delivery apply.

ZEHNDER GROUP INTERNATIONAL SALES
Almweg 34, DE-77933 Lahr
T +49 7821 586-392, F +49 7821 586-406
International.sales@zehndergroup.com
www.runtal.com

A member company of the Zehnder Group.